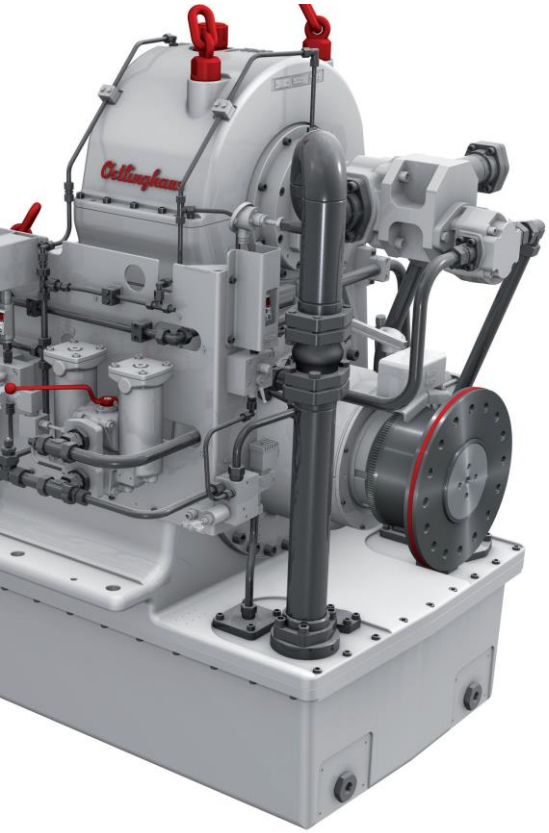

Ortlinghaus

Prop.act

Independent Trolling Solution

Prop.*act*

Ortlinghaus

Independent Trolling Solution

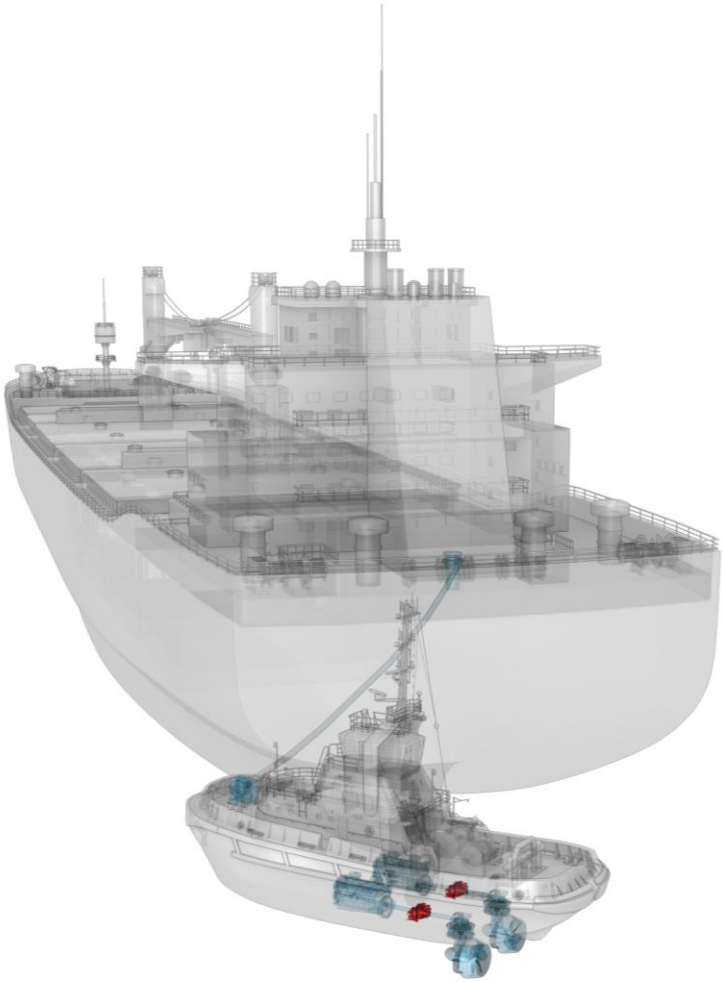

Precise and safe manoeuvring

- Prop.*act* is a self sufficient clutch system
- Allows to vary the speed of the propeller at constant motor speed

▶ Stepless variation of thrust

Firefighting

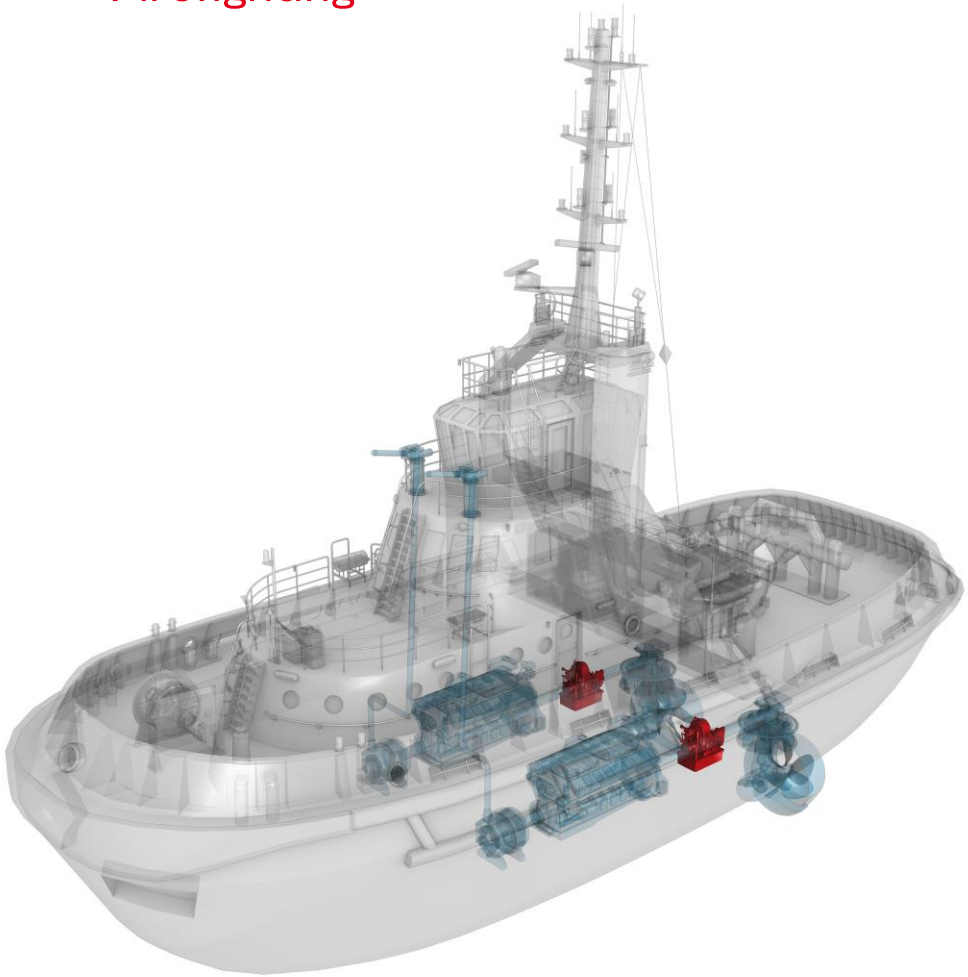

Pinpoint accuracy in any situation

- Prop.*act* HD is specially made for use in firefighting systems
- Firefighting pump can be operated via main engine while drive is still active and holds the position at low propeller speed

Trolling | Dynamic Positioning

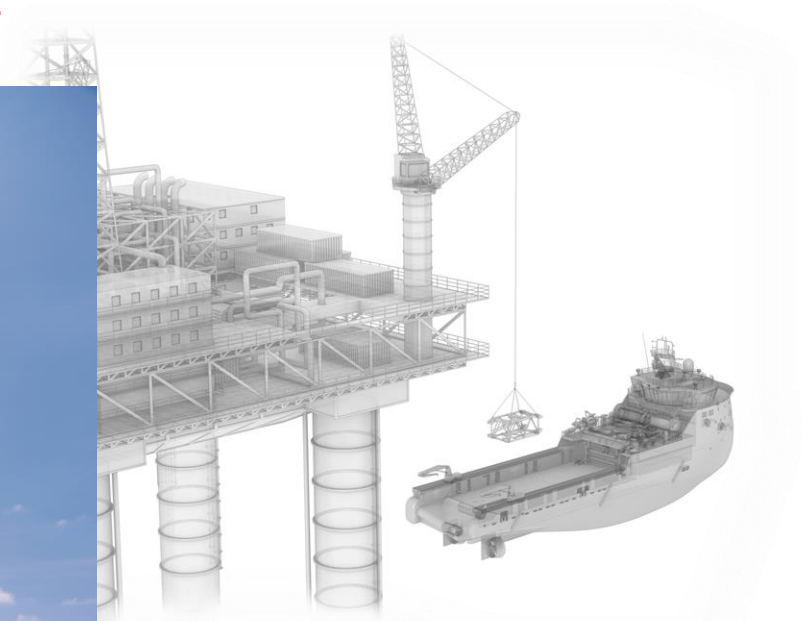

Precise and safe positioning

- The Prop.*act* is designed for continuous operation and therefore can be used for dynamic positioning.

Ortlinghaus System Solution

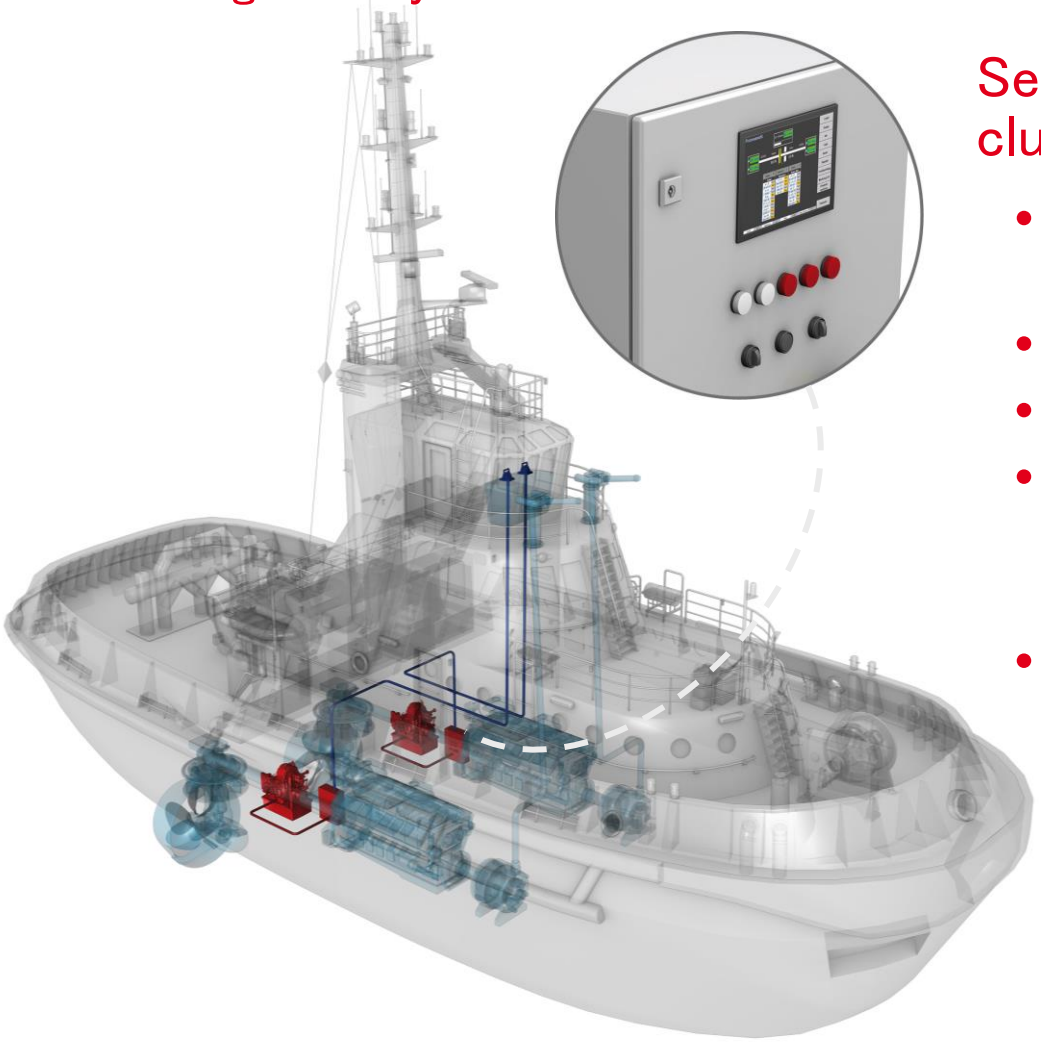

Self sufficient, ready-to install clutch system

- Can be freely positioned in the drive train
- Mounted on the floor
- Connected to the ships control
- Prop.*act* cooling system integrated in the cooling circuit of the vessel
- Free accessibility

Features

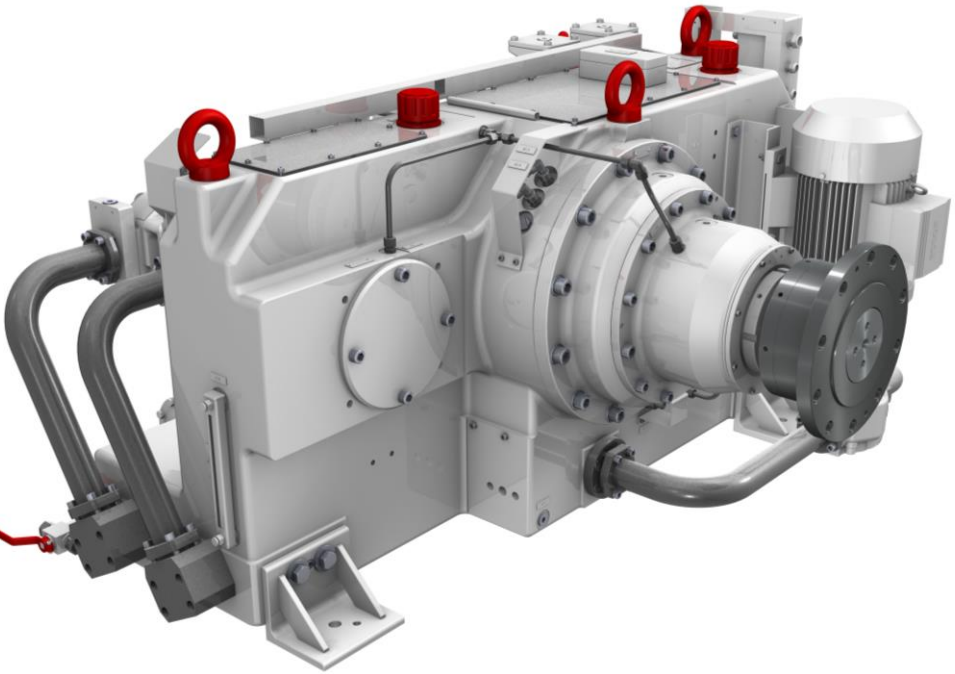

Prop.*act* control

Additional electric pump

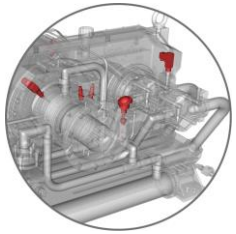

Sensors

Active shaft brake

Customer PTO

Prop.act

Ortlinghaus

Full Propeller Control

Extreme continuous slipping

Sturdy construction

Simple integration

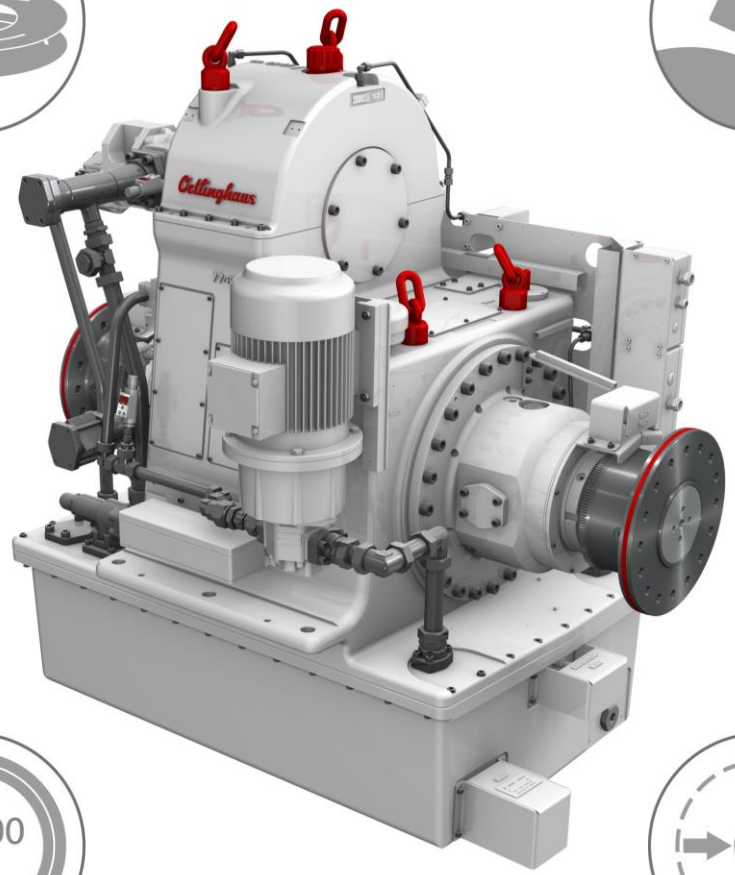

Trolling to speeds close to 0

Safety

Costs

Long service life

40.000 h

Compact design

Prop.act

Ortlinghaus

Technical data

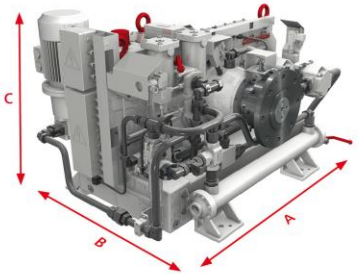

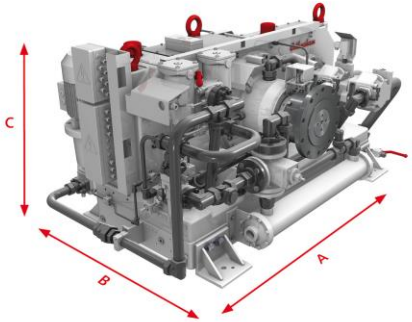

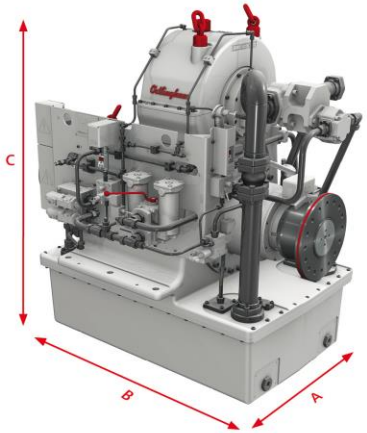

	Prop.act		
	66 MD	72 MD	75 HD
$T_{Mot, nenn}$	15.750 Nm	25.000 Nm	35.650 Nm
P / n - Factor	1,65	2,62	3,7
$n_{nenn, max.}$ - SL	1.800 min^{-1}	1.800 min^{-1}	1.800 min^{-1}
$n_{nenn, max.}$ - ML	1.400 min^{-1}	1.400 min^{-1}	1.000 min^{-1}
$n_{nenn, max.}$ - LL	1.000 min^{-1}	1.000 min^{-1}	750 min^{-1}
Power PTO	40 kW	60 kW	60 kW
Cooling capacity *)	45 kW V_{H2O} =3,5m³/h; T_{H2O} =38°C	90 kW V_{H2O} =10m³/h; T_{H2O} =38°C	450 kW V_{H2O} =27m³/h; T_{H2O} =38°C
Tank oil volume	120 l	190 l	450 l
A	1.370 mm	1.740 mm	1.450 mm
B	1.230 mm	1.440 mm	1.930 mm
C	820 mm	960 mm	1.720 mm
Weight 1)	~1.250 kg	~2.000 kg	~3.900 kg
Weight 2)	~1.450 kg	~2.250 kg	~4.250 kg

*) in dependence of V_{H2O} and $T_{H2O,EIN}$
1) without oil filling, without stand-by pump /brake
2) without oil filling, with stand-by pump /brake

Power loss during slipping

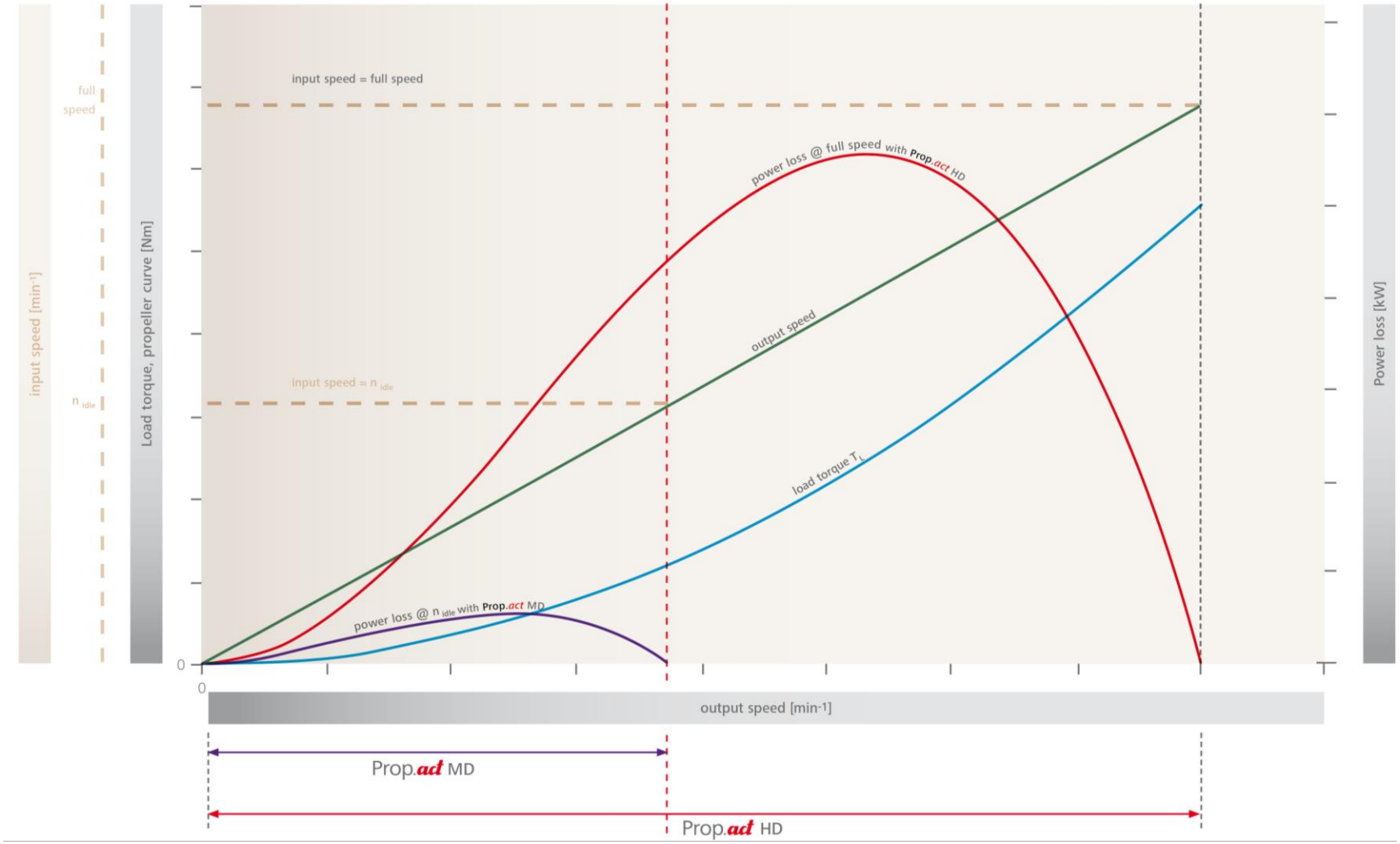

Sales and Service

Ortlinghaus
worldwide

Original
spare parts

Product
overhaul at
Ortlinghaus

Service &
repair
worldwide

Condition
check